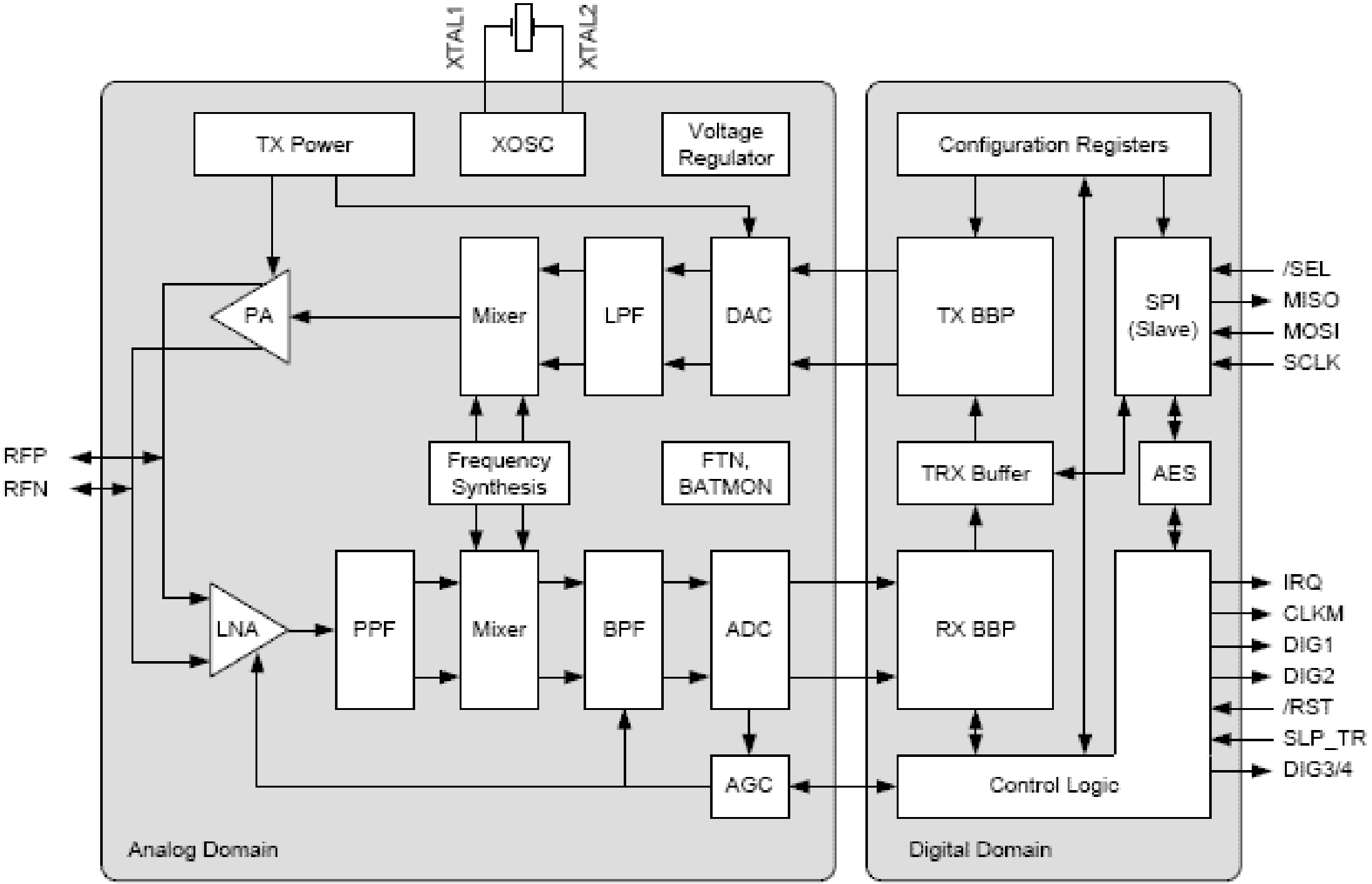
XTAL1
XTAL2
TX Power
XOSC
Voltage Regulator
Configuration Registers
PA
Mixer
LPF
DAC
TX BBP
SPI (Slave)
/SEL
MISO
MOSI
SCLK
RFP
RFN
Frequency Synthesis
FTN, BATMON
TRX Buffer
AES
LNA
PPF
Mixer
BPF
ADC
RX BBP
IRQ
CLKM
DIG1
DIG2
/RST
SLP_TR
DIG3/4
AGC
Control Logic
Analog Domain
Digital Domain