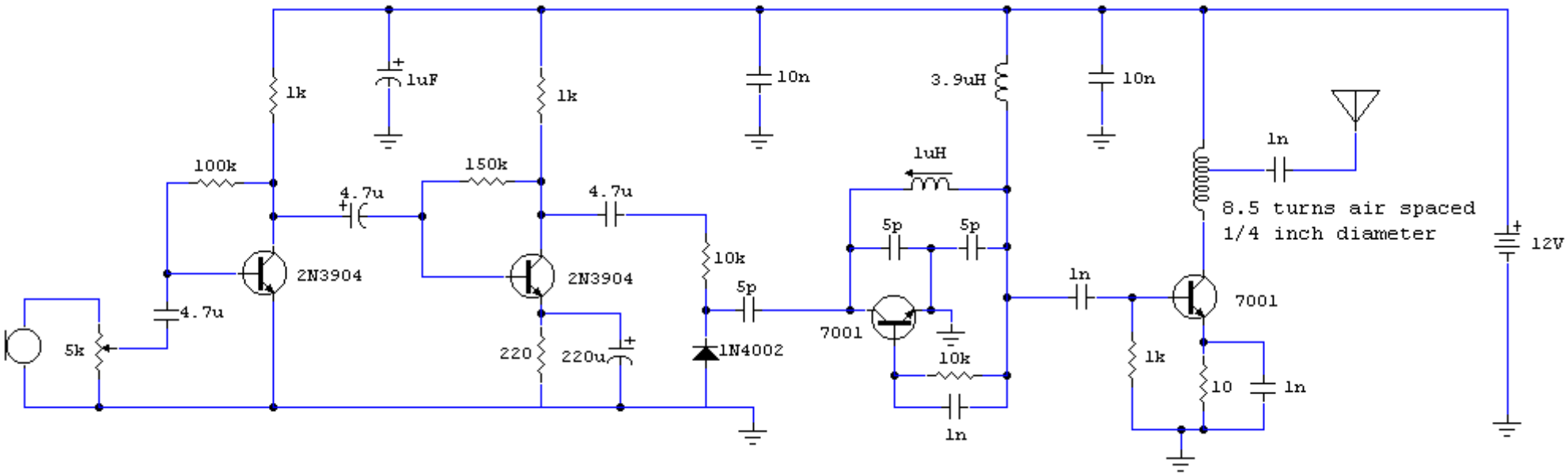
1k
1uF
1k
10n
3.9uH
10n
1n
100k
150k
1uH
4.7u
4.7u
8.5 turns air spaced
1/4 inch diameter
12V
5p
5p
10k
2N3904
2N3904
5p
1n
7001
4.7u
7001
5k
220
220u
1N4002
10k
1k
10
1n
1n